POWER-WIN TECHNOLOGY CORP.

www.power-win.com

Open Frame Type Switching Power Supply

500Watts Medical and ITE Single Output

FEATURES

- Both ITE & Medical Approvals.
- High Power density, 500W in 5" x 3" footprint.
- Medical safety approved (2 x MOPP between primary to secondary.)
- Altitude during operation: ITE up to 5000m ,Medical Below 3000m.
- Meet Medical BF rated.
- 3 years warranty.

B-Type
open frame
L127xW76.2xH34mm
Weight: 420g

E-Type
U Channel with cover
L143xW87.2xH46.5mm
Weight: 550g

ELECTRICAL SPECIFICATIONS

- Input range : 90 - 264VAC (Refer to derating curve).
- Frequency : 47 - 63Hz.
- Power Factor : > 0.95 @115VAC; > 0.90 @230VAC @full load.
- Inrush current :<40A peak @115VAC; <80A peak @230VAC cold start @25°C.
- Input current (rms) : 6.3A @115VAC; 3A @230VAC max.
- Efficiency : > 93% typical @70% full load, 230VAC.
- Touch current < 100uA @264VAC.
- Maximum output power : 500Watts forced air cooling.
- Hold-up time : > 16ms typical @80% full load, 115VAC.
- Short circuit protection : Auto-recovery.
- Over load protection : Auto-recovery.
- Over voltage protection : Latch off type. AC Recycle.
- Over temperature protection : Latch off type. AC Recycle.

SAFETY STANDARDS

UL60601-1 3.1rd Edition
TUV EN60601-1 3.1rd Edition
CB IEC60601-1 3.1rd Edition
UL/c-UL UL62368-1
TUV EN62368-1
CB IEC62368-1

EMC STANDARDS

EN60601-1-2
EN55011 Class B
EN55032 Class B
EN55035
FCC Part 15 Class B
FCC Part 18 Class B
CE

ENVIRONMENTAL

- Operating temperature : -20 to +70°C (Refer to derating curve).
- Operating Humidity: 10% to 95%, non-condensing.
- Storage temperature: -20°C to +85°C.
- Storage Humidity: 0% to 95%, non-condensing.
- MTBF : > 240,000 hours@full load and 25°C ambient temperature per Telcordia(Bellcore).

DC OUTPUT & FEATURES

Model No.		Main Output (V1)				Output (V2)	Convection total power (100-120Vac)	Convection total power (200-264Vac)	25CFM Forced air total power
		Output Voltage	Convection (100-120Vac)	Convection (200-264Vac)	Forced air	12VFAN			
B-Type	PW-500B2-1Y120B**Z**	+12V	18.33A	23.33A	41.6A	12V/0.3A	220W	280W	500W
	PW-500B2-1Y240B**Z**	+24V	9.16A	11.66A	20.8A				
	PW-500B2-1Y480B**Z**	+48V	4.58A	5.83A	10.4A				
E-Type	PW-500B2-1Y120E**Z**	+12V	17.5A	23.33A	41.6A	12V/0.3A	210W	280W	500W
	PW-500B2-1Y240E**Z**	+24V	8.75A	11.66A	20.8A				
	PW-500B2-1Y480E**Z**	+48V	4.37A	5.83A	10.4A				

Note:
1. Output connector options: **Z=T** (Terminal block type) , **Z=M** (Mini Fit type) or **Z=C** (Connector type)
2. Output voltage regulation 12V ± 3% , 24V and 48V ± 2% , With ripple and noise ≤1% for all models.
   (-1~-20℃ ambient temperature and EMS immunity output voltage regulation worst case ≦ 5%)
3. Ripple and noise are measured at oscilloscope 20MHz bandwidth by a 100uF electrolytic capacitor and a 0.1uF ceramic capacitor in parallel at output wire 300mm length connector.
4. Convection total Power, B-Type 220W or E-Type 210W (input 100-120Vac) or 280W (Input 200-264Vac) and 500W forced air cooling.
5. Output derating refer operating derating curve.
6. The switching frequency of this series is set 60~90KHz at full load.

POWER-WIN TECHNOLOGY CORP.
5F-6, No. 79, Sec. 1, Hsin-Tai 5th Road, Shi-Chi, New Taipei City, 221432 Taiwan, R.O.C.
Tel : 886-2-26983989(Rep) Fax : 886-2-26983978
http : //www.power-win.com E-Mail : sales@power-win.com

SAFETY AGENCY CERTIFICATIONS

Safety and EMC Performance

Description	Safety	EMC
Medical equipment	IEC 60601-1:2005+A1 Third Edition (IEC 60601-1:2012 reprint) EN 60601-1:2006+A11+A1+A12 ANSI/AAMI ES60601-1:2012 + A1+ A2 CAN/CSA C22.2 No. 60601-1:14 - Edition 3	EC/EN 60601-1-2 Ed4:2014 & EN55011 and FCC Part 18
Audio/video, ITE equipment	IEC 62368-1:2014 (Second Edition) EN 62368-1:2014+A11:2017 UL 62368-1, 2nd Edition, CAN/CSA C22.2 No. 62368-1-14, 2nd Edition	EN55032 & EN55035 & FCC part 15 **(*)** and ICES-003

Tests for conformance to this requirement will be performed with final system

(*) FCC PART15 compliance information and warnings:

This device complies with part 15 of the FCC Rules. Operation is subject to the following two conditions:

(1) This device may not cause harmful interference, and

(2) this device must accept any interference received, including interference that may cause undesired operation.

Insulation level and dielectric withstand (HI-POT)

Medical equipment	Isolation voltage	Means of patient protection
Primary circuits to secondary circuits	5656Vdc	2MOPP
Primary circuits to earth ground	2121Vdc	1MOPP
Secondary circuits to earth ground	2121Vdc	1MOPP

Audio/video, ITE equipment	Isolation voltage	Grade insulation
Primary circuits to secondary circuits	4242Vdc	Reinforced
Primary circuits to earth ground	2121Vdc	Basic
Secondary circuits to earth ground	2121Vdc	Basic

Note: Production testing use DC voltage test 4 Sec.

MECHANICAL SPECIFICATION

B-Type (open PCB)

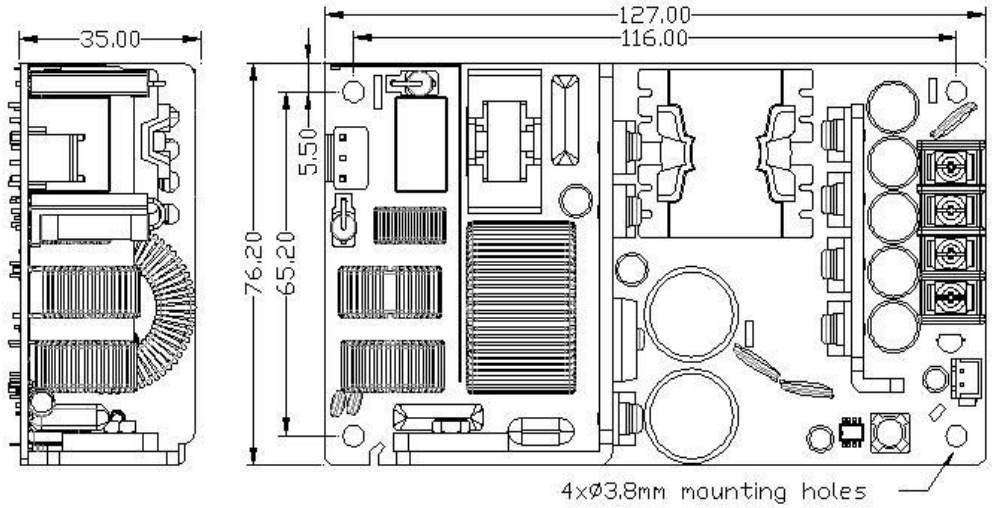

Dimension:
L127xW76.2xH35mm
Tolerance +/-1mm

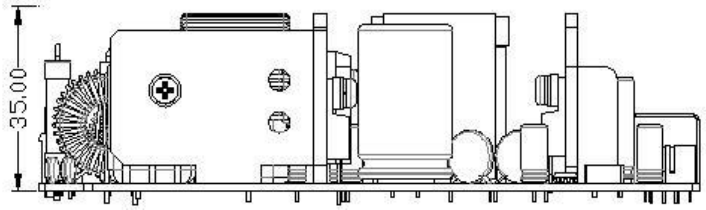

E-Type (U Channel with cover)

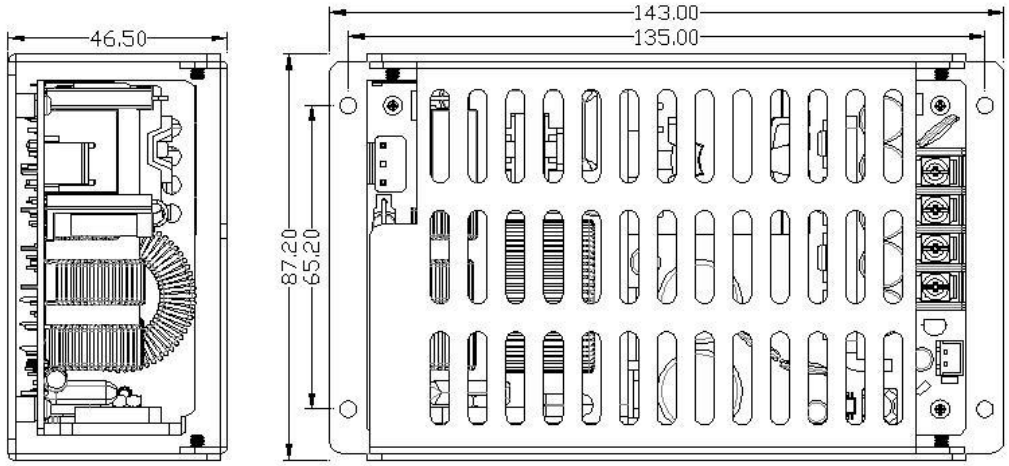

Dimension:
L143xW 87.2xH46.5mm
Tolerance +/-1mm

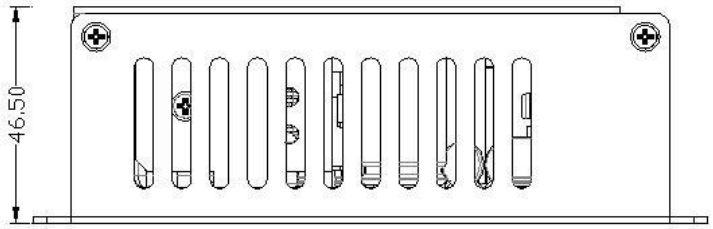

B-Type four positions of mounting holes and E-Type chassis must be securely connected to protective earth ground in the final system assembly for optimum SAFETY and EMI performance.

MOUNTING POINTS NOTES AND MOUNTING METHOD

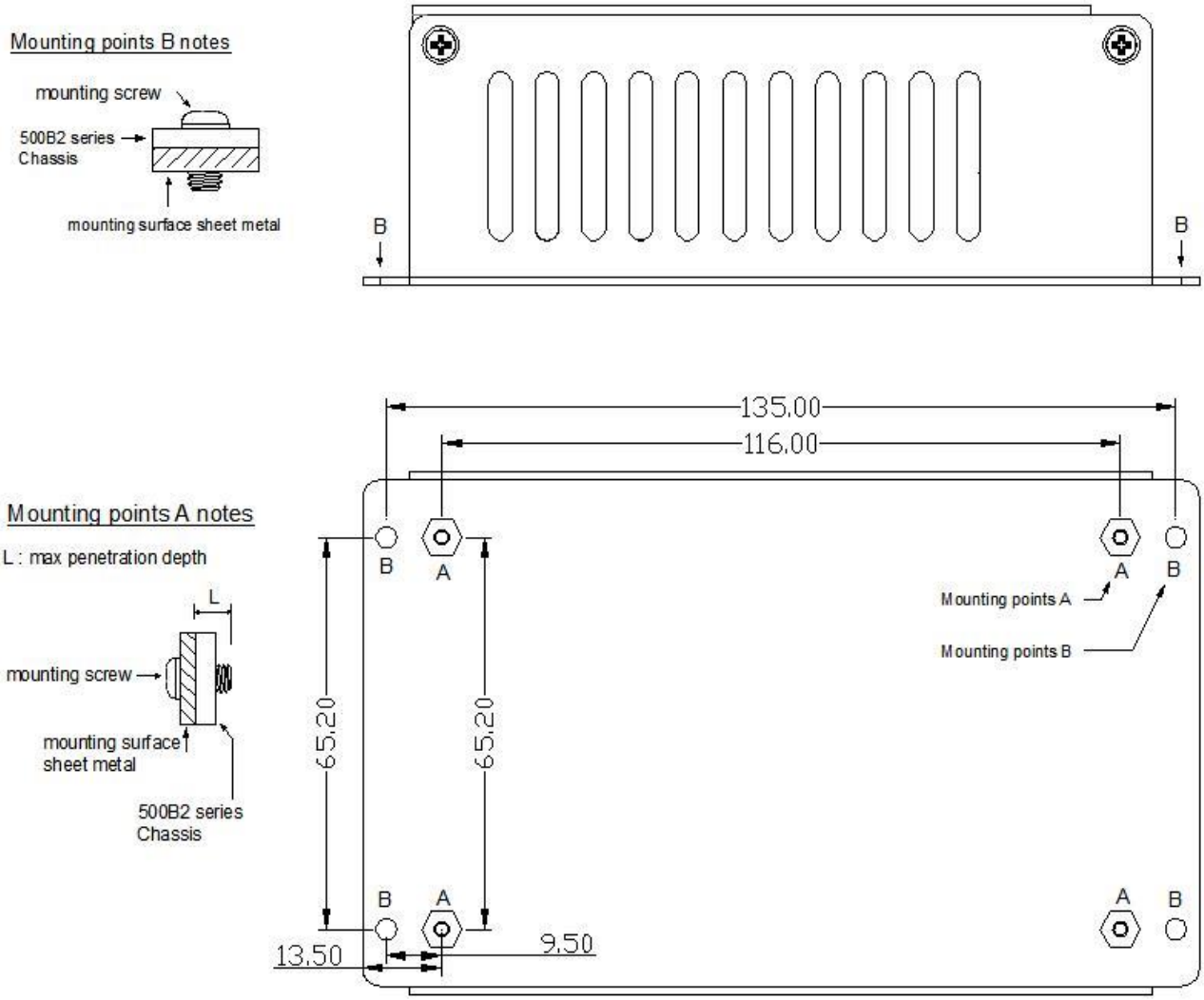

Mounting points A, M3X0.5 thread, Max. Penetration depth (L) 2.5mm.
Mounting points B, Fixing holes ψ3.5mm to accommodate M3 screws. For you design application.
Mounting points A Recommended torque for mounting screw :1-2 Kgf-cm.
Mounting points B Recommended torque for mounting screw : 2-3 Kgf-cm.

MODEL NUMBERING SCHEME

PW - 500B2 - 1Y 120 B T ZZZZZ

Output Voltage

B :B-Type (open PCB)

E : E-Type (U Channel with cover)

Any number or Blank

T : Screw Terminal Block output

M : 4.2mm pitch Mini-Fit type output

C : 3.96mm pitch Connector type output

Examples :

PW-500B2-1Y240BM :
500W / 24Vdc, B-Type (open PCB type), output connector, 4.2mm Mini-Fit connector.

MATCHING CONNECTORS

AC input connector (CN1)

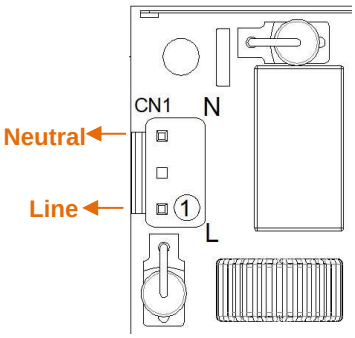

CN1: Input Connector

JST B3P-VH-B pitch: 3.96mm or equivalent,
mates with JST VHR-3N or equivalent

Pin #	Signal
1	AC Line
2	AC Neutral

Main output optional type (CN2)

Terminal Block Type

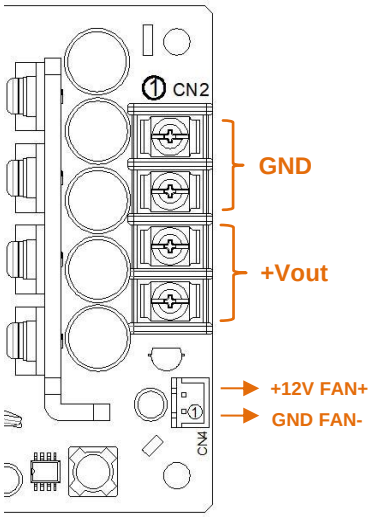

Mini Fit Type

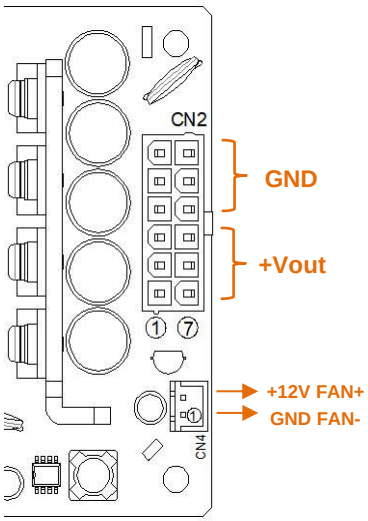

Connector Type

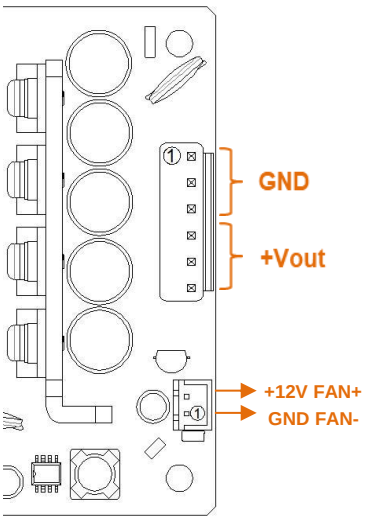

CN2: Main Output Connector

Terminal Block Type

4-Pole Terminal block pitch: 8.25mm ,
rate 20A/300V or equivalent

Pin #	Signal
1	GND
2	GND
3	+Vout
4	+Vout

12 PIN Mini-Fit Type

Molex P/N 353171220 Mini-Fit pitch: 4.2mm. or equivalent.
mates with Molex P/N 39012125 or equivalent.

Pin #	Signal	Pin #	Signal
1	+Vout	7	+Vout
2	+Vout	8	+Vout
3	+Vout	9	+Vout
4	GND	10	GND
5	GND	11	GND
6	GND	12	GND

Connector Type

JST B6P-VH-B pitch: 3.96mm or equivalent,
mates with JST VHR-6N or equivalent

Pin #	Signal	Pin #	Signal
1	GND	4	+Vout
2	GND	5	+Vout
3	GND	6	+Vout

CN4: FAN Output Connector

JST B2B-XH-A pitch: 2.5mm or equivalent,
mates with JST XHP-2 or equivalent

Pin #	Signal
1	GND FAN-
2	+12V FAN+

ENVIRONMENTAL

DERATING CURVE

Output power vs. Ambient Temperature.

AC input 100-120Vac Derating Curve

B-Type Convection cooling 220W max. Derate linearly 2% per °C from 41 to 70°C

E-Type Convection cooling 210W max. Derate linearly 2% per °C from 41 to 70°C

Force air cooling 500W max. Derate linearly 1% per °C from 51 to 70°C and 1% per °C from -1 to -20°C

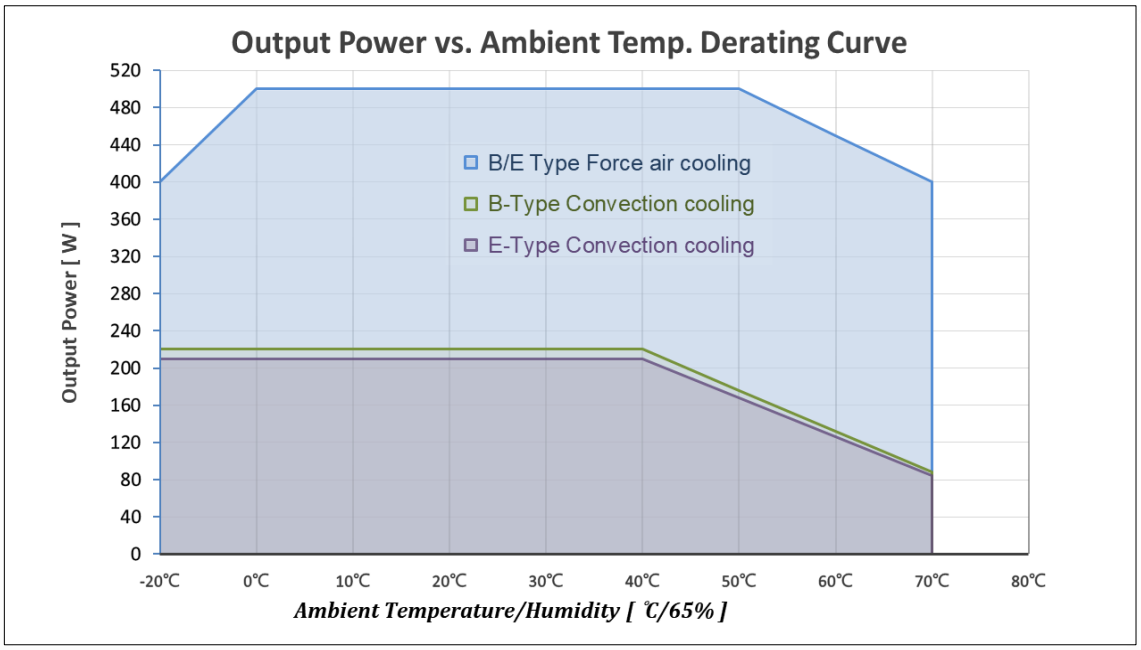

AC input 200-264Vac Derating Curve

B-Type and E-Type Convection cooling 280W max. Derate linearly 2% per °C from 41 to 70°C

Force air cooling 500W max. Derate linearly 1% per °C from 51 to 70°C and 1% per °C from -1 to -20°C

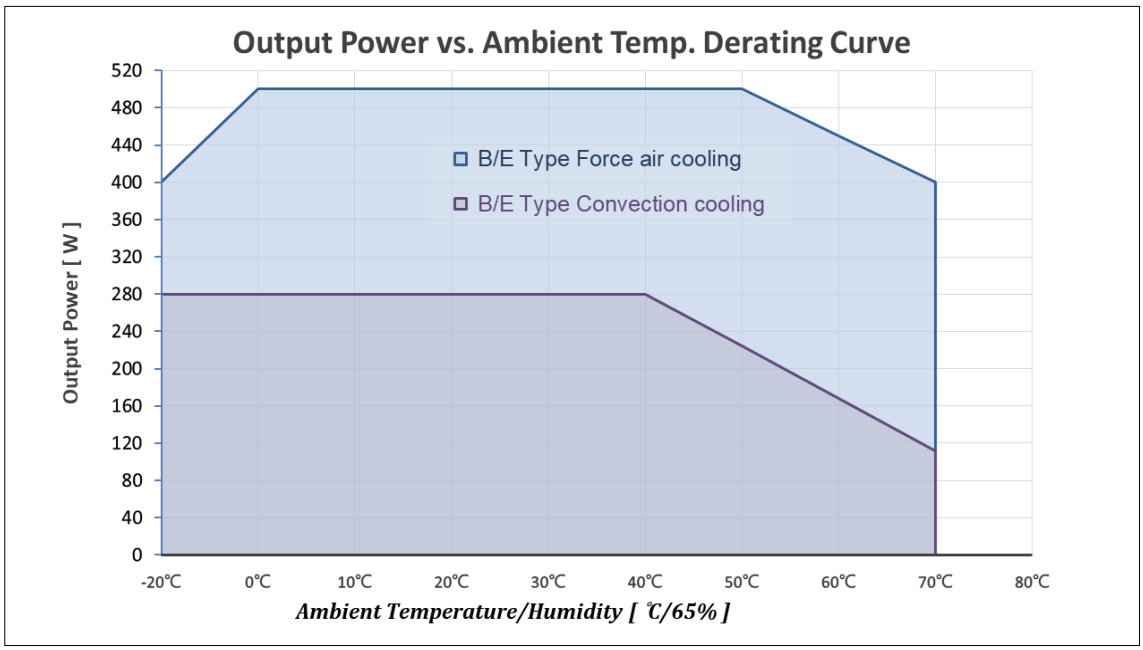

ENVIRONMENTAL

DERATING CURVE

Output power vs. Input voltage Derating Curve:

B/E Type Force air cooling 500W Max. Derate linearly 1% per Vac from 100 to 90Vac
B-Type Convection cooling Typical AC input 100-120Vac 220W max. Derate linearly 0.9% per Vac from 100 to 90Vac
E-Type Convection cooling Typical AC input 100-120Vac 210W max. Derate linearly 0.9% per Vac from 100 to 90Vac
B-Type and E-Type Convection cooling Typical AC input 200-264Vac 280W max.
Force air cooling ambient temperature 50℃ Max. Convection cooling ambient temperature 40℃. Max

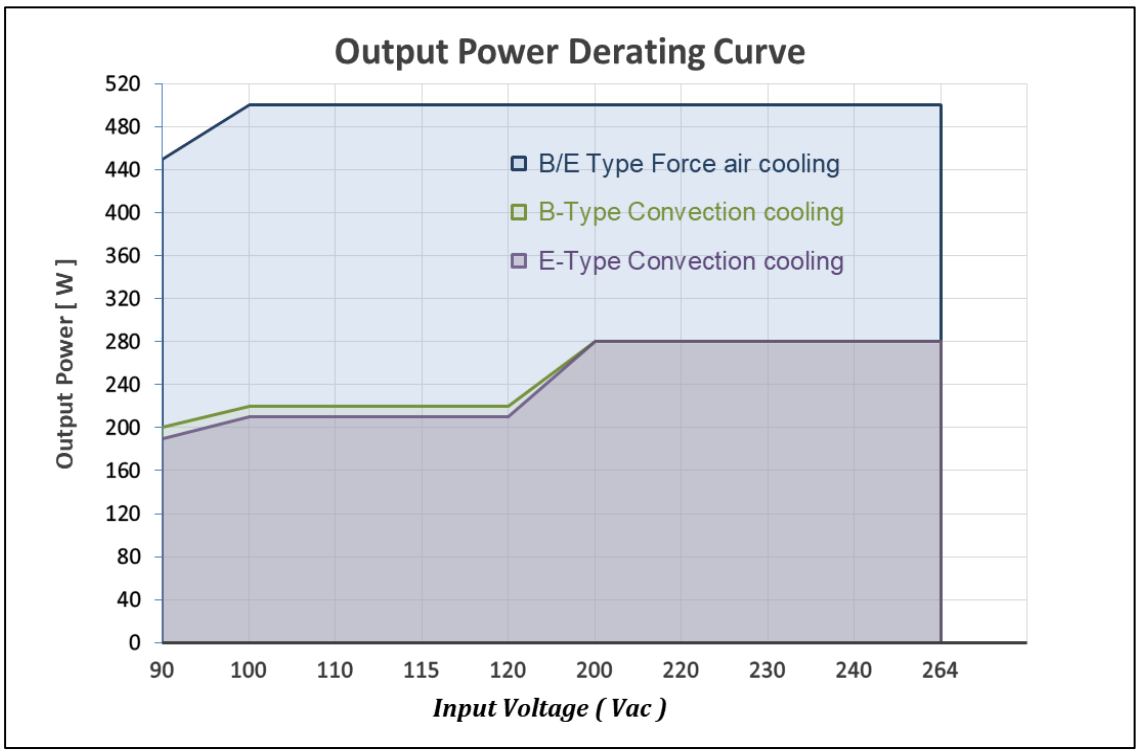

ENVIRONMENTAL

DC FAN Recommended Direction

B-Type

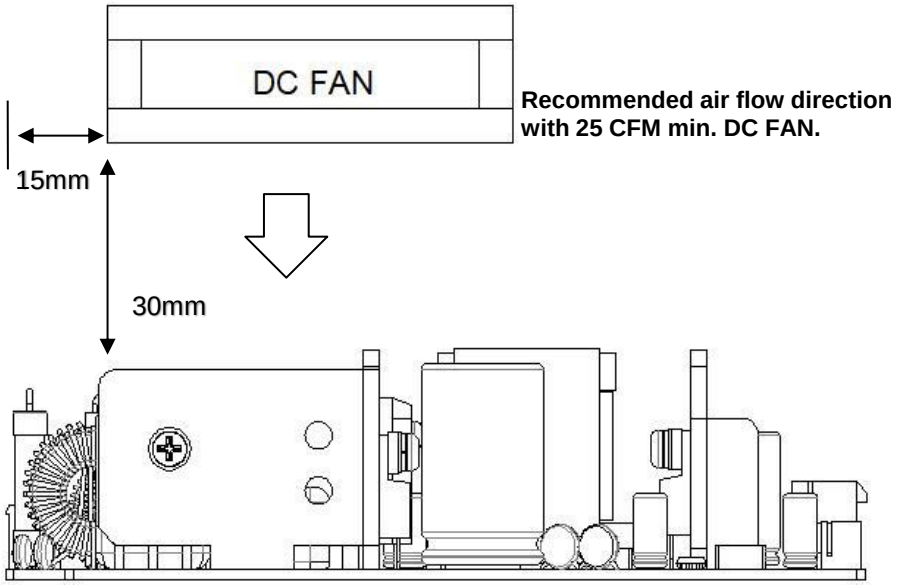

E-Type

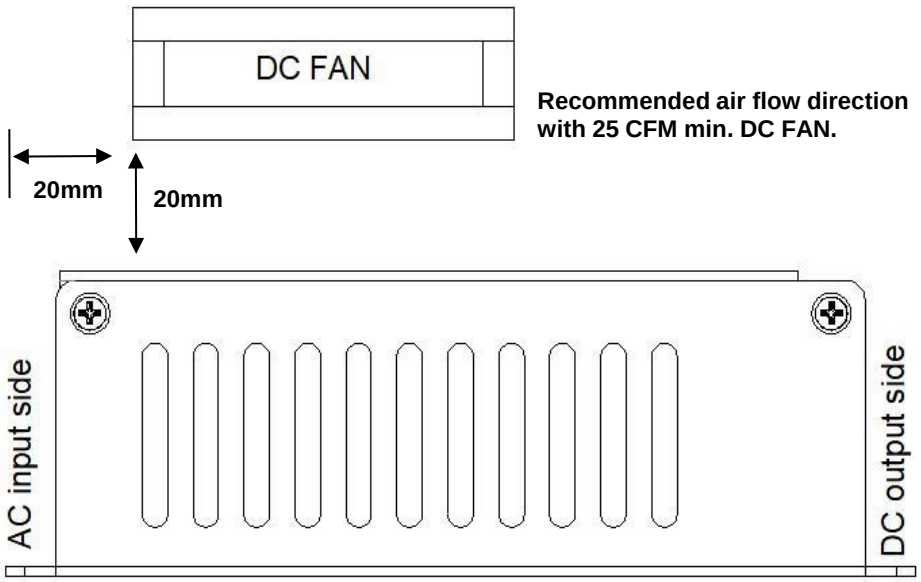

Installation orientation and space or airflow conditions will affect the POWER SUPPLY temperature, depending on the final system application.